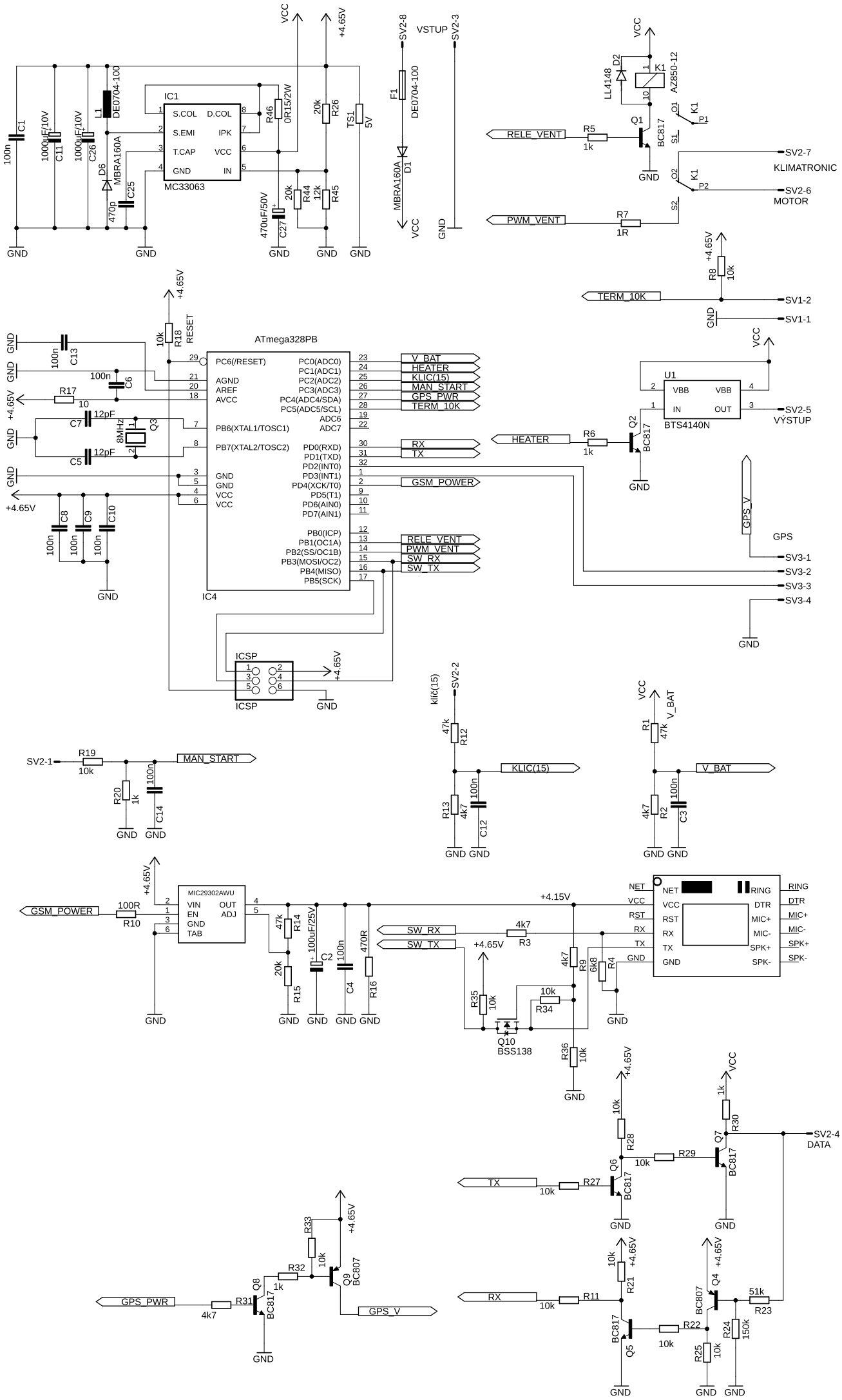
IC1
MC33063
S.COL
D.COL
S.EMI
IPK
T.CAP
VCC
GND
IN
L1 DE0704-100
D6 MBRA160A
C1 100n
C11 1000uF/10V
C26 1000uF/10V
C25 470p
R46 0R15/2W
R26 20k
TS1 5V
R44 20k
R45 12k
C27 470uF/50V
F1 DE0704-100
D1 MBRA160A
SV2-8
SV2-3
VSTUP
VCC
+4.65V
GND
K1 AZ850-12
D2 LL4148
Q1 BC817
R5 1k
R7 1R
RELE_VENT
PWM_VENT
SV2-7
KLIMATRONIC
SV2-6
MOTOR
R8 10k
TERM_10K
SV1-2
SV1-1
ATmega328PB
IC4
R18 10k
RESET
C13 100n
C6 100n
R17 10
C7 12pF
C5 12pF
Q3 8MHz
C8 100n
C9 100n
C10 100n
PC6(/RESET)
AGND
AREF
AVCC
PB6(XTAL1/TOSC1)
PB7(XTAL2/TOSC2)
PC0(ADC0)
PC1(ADC1)
PC2(ADC2)
PC3(ADC3)
PC4(ADC4/SDA)
PC5(ADC5/SCL)
ADC6
ADC7
PD0(RXD)
PD1(TXD)
PD2(INT0)
PD3(INT1)
PD4(XCK/T0)
PD5(T1)
PD6(AIN0)
PD7(AIN1)
PB0(ICP)
PB1(OC1A)
PB2(SS/OC1B)
PB3(MOSI/OC2)
PB4(MISO)
PB5(SCK)
V_BAT
HEATER
KLIC(15)
MAN_START
GPS_PWR
TERM_10K
RX
TX
GSM_POWER
RELE_VENT
PWM_VENT
SW_RX
SW_TX
ICSP
U1 BTS4140N
VBB
IN
OUT
SV2-5
VÝSTUP
R6 1k
Q2 BC817
GPS_V
GPS
SV3-1
SV3-2
SV3-3
SV3-4
SV2-1
R19 10k
R20 1k
C14 100n
klíč(15)
SV2-2
R12 47k
R13 4k7
C12 100n
R1 47k
R2 4k7
C3 100n
MIC29302AWU
VIN
EN
GND
TAB
OUT
ADJ
R10 100R
R14 47k
R15 20k
C2 100uF/25V
C4 100n
R16 470R
R3 4k7
R9 4k7
R4 6k8
R35 10k
R34 10k
R36 10k
Q10 BSS138
+4.15V
NET
VCC
RST
RX
TX
GND
RING
DTR
MIC+
MIC-
SPK+
SPK-
R28 10k
R29 10k
R27 10k
Q6 BC817
Q7 BC817
R30 1k
SV2-4
DATA
R33 10k
R32 1k
Q8 BC817
Q9 BC807
R31 4k7
R21 10k
R11 10k
Q5 BC817
R22 10k
R25 10k
Q4 BC807
R23 51k
R24 150k