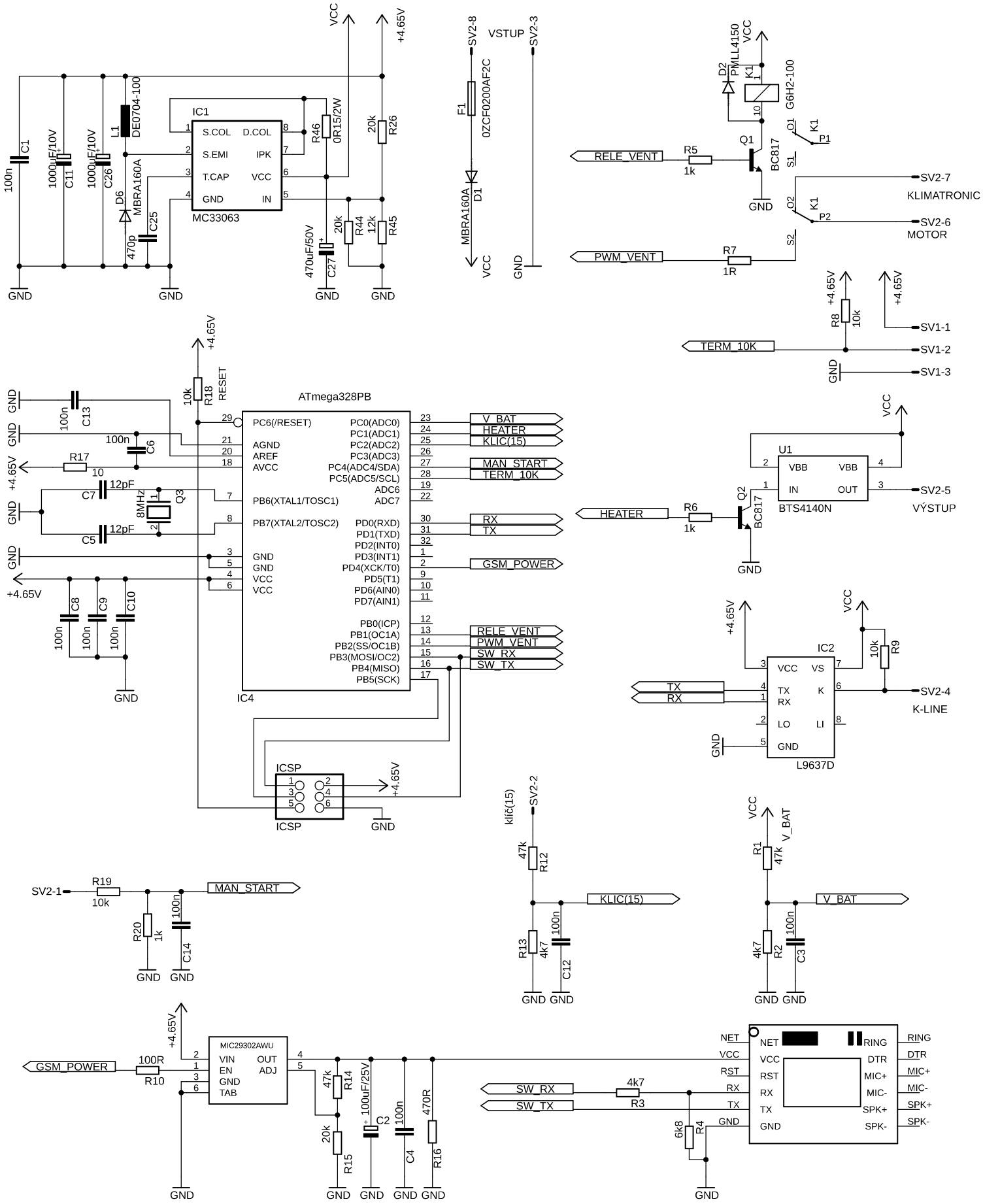
IC1
MC33063
S.COL
D.COL
S.EMI
IPK
T.CAP
VCC
GND
IN
L1 DE0704-100
D6 MBRA160A
C1 100n
C11 1000uF/10V
C26 1000uF/10V
C25 470p
R46 0R15/2W
R26 20k
R44 20k
R45 12k
C27 470uF/50V
VCC
+4.65V
GND
SV2-8
VSTUP
SV2-3
F1 0ZCF0200AF2C
D1 MBRA160A
D2 PMLL4150
K1 G6H2-100
Q1 BC817
RELE_VENT
R5 1k
PWM_VENT
R7 1R
SV2-7
KLIMATRONIC
SV2-6
MOTOR
R8 10k
TERM_10K
SV1-1
SV1-2
SV1-3
ATmega328PB
IC4
PC6(/RESET)
AGND
AREF
AVCC
PB6(XTAL1/TOSC1)
PB7(XTAL2/TOSC2)
PC0(ADC0)
PC1(ADC1)
PC2(ADC2)
PC3(ADC3)
PC4(ADC4/SDA)
PC5(ADC5/SCL)
ADC6
ADC7
PD0(RXD)
PD1(TXD)
PD2(INT0)
PD3(INT1)
PD4(XCK/T0)
PD5(T1)
PD6(AIN0)
PD7(AIN1)
PB0(ICP)
PB1(OC1A)
PB2(SS/OC1B)
PB3(MOSI/OC2)
PB4(MISO)
PB5(SCK)
V_BAT
HEATER
KLIC(15)
MAN_START
TERM_10K
RX
TX
GSM_POWER
RELE_VENT
PWM_VENT
SW_RX
SW_TX
R18 10k RESET
R17 10
C7 12pF
C5 12pF
Q3 8MHz
C13 100n
C6 100n
C8 100n
C9 100n
C10 100n
ICSP
U1 BTS4140N
VBB
IN
OUT
Q2 BC817
R6 1k
SV2-5
VÝSTUP
IC2 L9637D
VCC
VS
TX
RX
K
LO
LI
GND
R9 10k
SV2-4
K-LINE
SV2-1
R19 10k
R20 1k
C14 100n
MAN_START
klíč(15)
SV2-2
R12 47k
R13 4k7
C12 100n
KLIC(15)
R1 47k
R2 4k7
C3 100n
V_BAT
MIC29302AWU
VIN
EN
GND
TAB
OUT
ADJ
R10 100R
R14 47k
R15 20k
C2 100uF/25V
C4 100n
R16 470R
R3 4k7
R4 6k8
NET
VCC
RST
RX
TX
GND
RING
DTR
MIC+
MIC-
SPK+
SPK-